GOL'DSHTEYN, V. D., CAND MED SCI, "METABOLISM OF PYRIDOXINE AND NICOTINIC ACID IN PATIENTS WITH PULMONARY TUBERCULOSIS UNDER CHEMIOTHERAPY." MOSCOW, 1961. (SECOND MOSCOW MED INST IM N. I. PIROGOV). (KL, 3-61, 231).

DOBROKHOTOVA, M.N., kand.med.nauk; MASSEN, K.I.; POLYAKOVA, S.G.; IOFFE, R.A.; GOL'DSHTEYN, V.D. (Moskva)

Immediate results of combined chemotherapy with the use of cyclo-serine. Klin.med. no.3:130-136 '62. (MIRA 15:3)

1. Iz kafedry tuberkuleza (zav. - zasluzhennyy deyatel' nauki prof. A.Ye. Rabukhin) TSentral'nogo instituta usovershenstvovaniya vrachey, TSentral'noy klinicheskoy bol'nitsy imeni Semashko Ministerstva putey soobshcheniya (glavnyy vrach A.A Potsubeyenko) i bol'nitsy "Vysokiye gory" (glavnyy vrach V.G. Samochatov).
(CYCLOSERINE) (CHEMOTHERAPY)

GOL'DSHTEYN, V. D.

Disorders in the composition of the peripheral blood developing as a result of the therapeutic use of phthivazide. Probl. gemat. i perel. krovi no.4:29-32 '62. (MIRA 15:4)

1. Iz Moskovskoy tuberkuleznoy klinicheskoy bol'nitsy "Zakhar'ino" (glavnyy vrach V. P. Petrik) i filiala kafedry tuberkuleza (zav. - prof. F. I. Levitin) TSentral'nogo instituta usovershenstvovaniya vrachey.

(PHTHIVAZIDE--TOXICOLOGY)
(BLOOD--DISEASES)

GOL'DSHTEYN, V.D.; MIRINOV, G.B. (Moskva)

Combination of tuberculosis of the lungs and actinomycosis. Klin. med. 40 no.12:107-110 D '62. (MIRA 17:2)

1. Iz Moskovskoy gorodskoy klinicheskoy tuberkuleznoy bol'nitsy No.3 "Zakhar'ino" (glavnyy vrach V.P. Petrik) i filiala kafedry tuberkuleza (zav. - prof. F.I. Levitin) TSentral'nogo instituta usovershenstvovaniya vrachey.

GOL'DSHTEYN, V.D.

Development of pneumothorax as a result of therapeutic use of pneumoperitoneum. Vrach. delo no.7:133-135 Jl'63. (MIRA 16:10)

1. Moskovskaya gorodskaya tuberkuleznaya bol'nitsa "Zakhar'ino" i filial kafedry tuberkuleza (zav. - prof. F.I.Levitin) TSentral'nogo instituta usovershenstvovaniya vrachey.
(PNEUMOTHORAX) (PNEUMOPERITONEUM, ARTIFICIAL)

LEVITIN, [illegible]; [illegible], V.D., [illegible], Ye.[illegible]; [illegible], V.[illegible].

The cellular reactions in chronic pneumonia and [illegible] tuberculosis. Trudy [illegible] 167. [illegible]

1. Kiev[illegible] Tuberkuleznogo [illegible] veterinarnoy [illegible] i Klinicheskaya [illegible], Kiev.

GOL'DGEYZN, V.B.; MEZENOV, G.S.

Combination of tuberculosis and primary lung cancer. Trudy TSIU 63:102-108 '63. (MIRA 17:9)

1. Klinicheskaya bol'nitsa "Zaharyino", M[illegible] i kafedra tuberkuleza Tsentral'nogo instituta usovershenstvovaniya vrachey.

GOL'DSHTEYN, V.D.; MIRINOV, G.B.

Diagnosis of primary lung cancer in tuberculous patients. Ter. arkh. 35 no.7:106-108 Jl'63 (MIRA 17:1)

1. Iz Moskovskoy gorodskoy klinicheskoy tuberkuleznoy bol'nitsy No.3 "Zakhar'ino" (glavnyy vrach V.P.Petrik, nauchnyy rukovoditel' - prof. F.I. Levitin).

GOL'DSHTEYN, V.A.

Effect [illegible] the metabolism of pyridoxine and niacin [illegible] pulmonary tuberculosis. Ukr. vop. tub. no.4:69-75 '63. (MIRA 17:9)

LEVITIN, F.I.; GOLDSHTEYN, M.L.; KUTLER, I.A.; PROKHOROV, Ye.I.; FRADKIN, V.A.; CHAYSOVSKAYA, M.M.

Technic and evaluation of the results of tuberculin tests. Probl. tub. no.7:9-16 '63. (MIRA 18:1)

1. Iz kafedry tuberkuleza (zav. - zasluzhennyy deyatel' nauki prof. A.Ye. Rabukhin) TSentral'nogo instituta usovershenstvovaniya vrachey.

GOL'DSHTEYN, V.M., inzh.

Methods for calculating turntable ball bearings for excavators and cranes. Stroi. i dor. mashinostr. 3 no.1:8-10 Ja '58.
(Excavating machinery) (Cranes, derricks, etc.) (MIRA 11:1)

GOL'DSHTEYN, V.M., inzh.

Analyzing operating conditions of gears in rear axle balancers of motor graders. Stroi. i dor. mashinostr. 3 no. 7:19-22 Jl '58. (MIRA 11:8)

(Graders(Earthmoving machinery))

GOL'DSHTEYN, V.M., inzh.

Determining maximum stresses in motor graders. Stroi. i dor. mashinostr. 4 no.9:14-18 S '59. (MIRA 12:11)
(Graders(Earthmoving machinery))

GOL'DSHTEYN, V.M., inzh.

Calculating the transmission gear ratio for graders. Stroi.i dor.mashinostr. no.7:18-21 Jl '59. (MIRA 12:11)
(Graders(Earthmoving machinery))

GOL'DSHTEYN, V. M., Cand Tech Sci -- "Experimental and theoretical study of the autograder ~~dynamics when designing construction lines.~~" Mos, 1961. (Min of Higher and Sec Spec Ed RSFSR. Mos ~~Automobile~~-Roads Inst) (KL, 3-61, 242)

YAKL, A.

re.

GOL'DSHTEYN, M.N.; GOL'DSHTEYN, V.M.

Theory of the vibratory sinking of untapered piles. Vop. geotekh. no.6:3-19 '63. (MIRA 17:9)

APPROVED FOR RELEASE: 09/24/2001 CIA-RDP86-00513R000515710016-5"

GORBATOV, S.P. (Dnepropetrovsk); GOL'DSHTEYN, V.M. (Dnepr[illegible]

Reliable covering for wire transducers used in testing pile shells. Osn. fund.i mekh.grun. 6 no.1:30-[illegible]04. (MIRA 17:2)

GOLOSHTEYN, [illegible]

Performance of a centrifugal [illegible]
no.9:15-18 [illegible] '65.

[illegible], V.M., Pomi.tekhn.nauk

[illegible] (MIRA 16:10)

[illegible]

L 35829-66

ACC NR: AP6003749 (A) SOURCE CODE: UR/0113/65/000/010/0023/0026

AUTHORS: Marshak, S. F.; Gol'dshteyn, V. M. (Candidate of technical sciences)

ORG: VNIIStroydormash

26
B

TITLE: The stability of single-axle tractors in the turning position

SOURCE: Avtomobil'naya promyshlennost', no. 10, 1965, 23-26

TOPIC TAGS: tractor, vector, motion stability, coordinate system, vehicle engineering

ABSTRACT: The tilting of a trailer on level ground relative to a three-dimensional coordinate system is considered (see Fig. 1). The coordinate origin (point O) is at the center of the contact line of the wheels of the tractor. The absolute value of the angular velocity $\omega = \sqrt{\omega_Y^2 + \omega_X^2 + \omega_Z^2}$,

and the direction cosines $\cos\alpha = \frac{\omega_X}{\omega}$;

$\cos\beta = \frac{\omega_Y}{\omega}$;

$\cos\gamma = \frac{\omega_Z}{\omega}$.

Card 1/3 UDC: 629.114.2.001.5

ACC NR: AP6003749

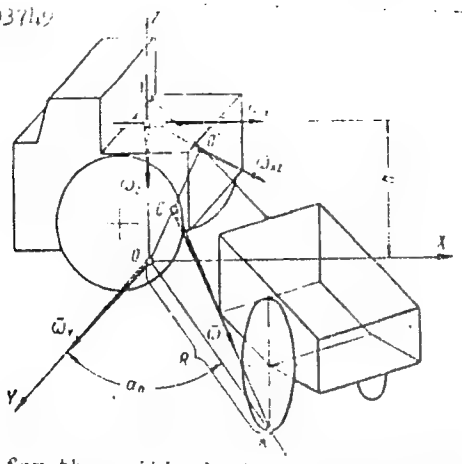

Fig. 1

The expression for the critical slope is found to be a function of six independent variables: the track, the displacement of the coupling from the axle of the tractor, the coordinates of the centers of gravity of the trailer and tractor, the ratio of the weights of the trailor and tractor, and the height of the overall center of gravity of the tractor with trailer. The critical angles for tipping forward and backward, respectively, are:

$$\beta_{cr} = \operatorname{arctg} \frac{d_n(1-K_m) - d_m K_m}{H_c}, \qquad \beta'_{cr} = \operatorname{arctg} \frac{d'_n(1-K_m) + d'_m K_m}{H_c},$$

Card 2/3

ACC NR: A

Orig. art. has: [illegible] photo, [illegible] diagram, 1 graph, and [illegible] formulas.

SUB CODE: 13/ SUBM DATE: none/ ORIG REF: 003

Card 3/3

GREBENSHCHIKOV, V.S.; GOL'DSHTEYN, V.S.; KOZLOVSKIY, Yu.I.

Cold cutting of small-module gear wheels. Stroi. i dor. mashinostr. 3 no.1:35-38 Ja '58. (MIRA 11:1)

(Gear-cutting machines)

KOCHNOV, V. Ye. (Chelyabinsk); GOL'DSHTEYN, V. Ya. (Chelyabinsk)

Kinetics of recrystallization of electrical steel during its annealing. Izv. AN SSSR. Otd. tekh. nauk. Met. i topl. no.6: 61-66 N-D '62. (MIRA 16:1)

(Steel—Heat treatment)
(Crystallization)

GERSHMAN, R.B., inzh.; GELIKOV, A.M., [illegible]; [illegible] V.Ye., inzh.; GOL'DSHTEYN, V.Ya., inzh.; VASIL'YEVA, S.M.

Effect of a bend in electrical steel on its magnetic properties. Elektrichestvo no.11:62-63 N '63. (MIRA 16:11)

1. Nauchno-issledovatel'skiy institut metallurgii, Chelyabinsk.

KOCHNOV, V.Ye.; GOL'DSHTEYN, V.Ya.

Recrystallization stages in transformer steel. Fiz. met. i metalloved. 15 no.5:685-689 My '63. (MIRA 16:8)

1. Nauchno-issledovatel'skiy institut metallurgii, Chelyabinsk.
(Steel--Metallography) (Crystallization)

[illegible]

[illegible]

[illegible]

Monthly List of [illegible], [illegible], [illegible]

8 (3)

SOV/112-57-5-10211

Translation from: Referativnyy zhurnal. Elektrotekhnika. 1957. Nr 5, p 92 (USSR)

AUTHOR: Gol'dshteyn, Ya. M.

TITLE: Speeding-up the Process of Drying the Transformer Core-and-Coil Assembly (Suggestion by G. G. Lisin) (Uskoreniye protsessa sushki vyyemnoy chasti transformatorov /predlozheniye G. G. Lisina/)

PERIODICAL: Sb. rats. predlozh. M-vo elektrotekhn. prom-sti SSSR, 1956, Nr 1 (59), p 19

ABSTRACT: Transformer core-and-coil assembly drying by the induction-loss method in its own tank, without application of vacuum, can be speeded up by blowing hot air directed from bottom to top.

A.G.K.

Card 1/1

8 (3)

SOV/112-57-5-10213

Translation from: Referativnyy zhurnal. Elektrotekhnika, 1957, Nr 5, p 92 (USSR)

AUTHOR: Gol'dshteyn, Ya. M.

TITLE: A Method to Check the Equality of Turn Numbers in Wound Transformer Coils Connected in Several Parallel Groups (Suggestion by S. A. Farbman) (Sposob kontrolya ravenstva chisla vitkov v namotannykh katushkakh transformatora, vklyuchayemykh v neskol'ko parallel'nykh grupp /predlozheniye S. A. Farbmana/)

PERIODICAL: Sb. rats. predlozh. M-vo elektrotekhn. pro-sti SSSR, 1956, Nr 1 (59), pp 19-20

ABSTRACT: It is suggested that a short-circuit experiment, as a part of transformer test (with the core-and-coil assembly lifted from the tank), be made with 50-100% of the rated current for 30-45 minutes. If turn numbers in parallel circuits are unequal, the coils will heat unequally, which can be detected by hand.

A.G.K.

Card 1/1

The growth and operation of the synthetic-ammonia factory of the Bereznikov Chemical Combine Ya R Gudelshtein. *J Chem Ind* (Moscow) 1934, No 5, [illegible]

H M Leicester

METALLURGICAL LITERATURE CLASSIFICATION

1ST AND 2ND ORDERS

3RD AND 4TH ORDERS

PROCESSES AND PROPERTIES INDEX

Co

18

Purifying salt solutions for the manufacture of soda. Ya. R. Gol'dshtejn. Russ. 51,809, September 30, 1937. Ca and Mg salts are removed by treatment first with NaOH in an amt. insufficient to ppt. all the Mg, and addn. of the remaining amt. of NaOH in a second stage together with alkali carbonate to ppt. Ca

ASM-SLA METALLURGICAL LITERATURE CLASSIFICATION

Intensification of the production of calcined soda in the Berezniki Chemical Combine Ya. R. Gol'dshtein. J. Chem. Ind. (U.S.S.R.) 14, 471 (1937). H. M. Leicester

ASM SLA METALLURGICAL LITERATURE CLASSIFICATION

18

The preliminary purification of brines in soda production

Va. R. Gol'dshteĭn. *J. Chem. Ind.* (U. S. S. R.) 15, No. 11, 17-21 (1938).—Economic analysis of the process of preliminary purification shows that the advantages outweigh the added cost.

H. M. Leicester

ASM-SLA METALLURGICAL LITERATURE CLASSIFICATION

1ST AND 2ND ORDERS

PROCESSES AND PROPERTIES INDEX

Establishing control and the gas calculations in soda production. Ya. R. Gol'dshtein. *J. Chem. Ind.* (U. S. S. R.) **16**, No. 2, 21-2(1939). **Some remarks on the paper of Yu. P. Kotelevskii** (C. A. 33, 3279[1]). G. I. Mikulin. *Ind.* 22, 3. Polemical with K. H. M. Lorentz.

ASM-SLA METALLURGICAL LITERATURE CLASSIFICATION

CA

18

Intensification and technical growth in the production of calcined soda. Ya. R. Gol'dshtein. *J. Chem. Ind.* (U. S. S. R.) 16, No. 3, 27-34(1939).—Improvements in the app. and steps of the process are discussed.

H. M. Leowe

METALLURGICAL LITERATURE CLASSIFICATION

CA

14

Reactions in suspension. Ya. R. Gol'dshtein. *Zhur Prikkad. Khim.* (J. Applied Chem.) 20, 953-62(1947). Description of existing processes of water purification, classified crystn., and catalytic reactions using finely divided solids maintained in suspension. Possibilities of extension of the principle to a wide variety of processes are pointed out. N. Thon

ASM-SLA METALLURGICAL LITERATURE CLASSIFICATION

18

C.A.

Theory and practice of the ammonia soda process. I. Theory of the process of carbonation of the ammoniacal solution Ya. R. Gol'dshtein. *Zhur. Prikkl. Khim.* J. Applied Chem.) 21, 82-103(1948).—In the reaction $NaCl + NH_4HCO_3 \rightarrow NaHCO_3 + NH_4Cl$, the acid nature of NH_4Cl requires that a certain amt. of $(NH_4)_2CO_3$ be present in order to neutralize the acidification. This is confirmed by the experience that complete bicarbonation cannot be attained, 30-40% of the total alky. remaining in the form of carbonates. The process is further complicated by the formation of Na_2CO_3, which must be accompanied by a parallel increase of the amt. of free NH_3 as a result of hydrolysis of $(NH_4)_2CO_3$. The increase of the pH resulting from the pptn. of $NaHCO_3$ must be compensated by an increase of the amt. of carbonates. The course of the carbonation process is completely detd. by the curve of the pH of the system plotted against the degree of carbonation. In particular, the curve representing the variation of the rate of absorption of CO_2 with progressing carbonation is an exact replica of the curve of the variation of the pH. The kinetics of the process are represented by a law, rate = $k[OH^-]\sqrt{p}$, where p = total pressure of the gas, c = CO_2 concn. therein. The rate detg. step is the slow hydration $CO_2 + H_2O \rightarrow H_2CO_3$. Intermediate formation of the carbamate $NH_2CO_2NH_4$ is possible, inasmuch as it can take place by direct union of CO_2 and NH_3 without preliminary hydration of the CO_2. However, in the subsequent decompn. of the carbamate, the resulting CO_2 must of necessity undergo hydration to H_2CO_3. This step, consequently, remains the rate-detg. step even in the carbamate mechanism. The reaction between CO_2 and NH_3 proceeds more intensely in the vapor phase than in the soln.; the vapor-phase reaction, with subsequent soln. of the carbamates and carbonates formed, plays an important role in the process. The anomaly occurring in the middle zone of the carbonation process, and consisting in a temporary retardation of the decrease in, or even a temporary increase in, the rate, is due entirely to static properties of the soln. at that stage, as reflected by the pH curve, and not to dynamic factors, as assumed by Belopol'skii N. Then (C.A. 43, 3574h)

APPROVED FOR RELEASE: 09/24/2001 CIA-RDP86-00513R000515710016-5"

GOL'DSHTEYN, Ya.R.

Theory and practice of soda production. II. Kinetics of crystallization of sodium bicarbonate. J. Appl. Chem. U.S.S.R. 24, 931-45 '51 [Engl. translation]; Zhur. Priklad. Khim. 24, 817-31 '51. (MLRA 4:6)
(CA 47 no.21:11673 '53)

GOL'DSHTEYN, Ya. R.

The theory and practice of the ammonia-soda process. III. Mechanism of the growth of sodium bicarbonate crystals. Ya. R. Gol'dshtein. Zhur. Prikl. Khim. 34, 925-30(1961); cf. C.A. 47, 11676c.--During the initial stage of crystn. of $NaHCO_3$ in lab. column large-sized crystals can be obtained if the rate of carbonation of the soln. does not exceed the established max. It is absolutely necessary for the crystn. to begin before the crit. stage of carbonation at 110% is reached. When the established rate of carbonation is exceeded, formation of new nuclei of bicarbonate crystals results. The salt ppts. in form of polycryst. agglomerates caused by initial attachment and subsequent growing together of individual crystals. The process of carbonation is governed by the rate of absorption of CO_2 which varies in individual zones of crystn. inside the crystn. column.

M. O. Holowaty

L 24264-66 EWT(1)/EWA(h)

ACC NR: AR6005252 SOURCE CODE: UR/0058/65/000/009/H014/H014

AUTHOR: Gol'dshteyn, Yu. A.

TITLE: Concerning the signal to noise ratio at the output of a mutual correlation detector

SOURCE: Ref. zh. Fizika, Abs. 9Zh113

REF. SOURCE: Tr. Nauchno-tekhn. konferentsii Leningr. elektrotekhn. in-ta svyazi, vyp. 1, 1964, 77-81

TOPIC TAGS: signal to noise ratio, signal noise separation, correlated noise, signal reception

ABSTRACT: The signal/noise ratio is determined at the output of a mutually-correlated detector in the reception of noise-like signals. [Translation of abstract]

SUB CODE: 09

Card 1/1

GOL'DSHTEYN, Yefrem Iosifovich, aspirant

Design of optimum [illegible]ing chokes. Izv. vys. ucheb. zav. elektromekh. 7 no.4[illegible]36-443 '64 (MIRA 17:7)

1. Kafedra elektricheskikh stantsiy Tomskogo politekhnicheskogo instituta.

GOL'DSHTEYN, Ye.I.

Selecting the geometry of standard ribbon cores for transformer chokes. Standartizatsiia 28 no.8:31-33 Ag '64.

(MIRA 17:11)

GOL'DSHTEYN, Ya.Ye., kand.tekhn.nauk

New economically alloyed carburizing steels with boron content.
Vest.mashinostr. 42 no.5:44-48 My '62. (MIRA 15:5)
(Boron steel)

Fundamental Questions in the Production of Diesel Bearings with Bronze Coatings. Ya. E. Goldshtein (*Vestn. Metallo...m.* (*Met. Ind. Herald*), 1938, 18, (6), 3-25; *Chem. Zentr.*, 1939, 110, (II), 2371). (In Russian.) The best composition for lead bronze coatings on steel bearings is determined by the design, construction, and use of the machine for which they are intended. Lead bronzes recommended for tractor bearings are: (1) lead 10-15, nickel 1.8-2.2%, remainder copper; (2) lead 35-40, calcium 0.02, silicon 0.02, sulphur 0.02%, remainder copper. In the absence of nickel the lead content of the coating on crankshaft bearings can in most cases be reduced to 35-40%; the addition of sulphur, calcium, and lithium in amounts of 0.02-0.05% before casting is recommended to improve the fine structure and properties of the bronze. From the standpoint of manufacture and operation

a recommended coating for steel bearings used with nitrurized crankshafts in Diesel tractors is; lead 19-20, tin 2.75-3.5, nickel 5-6, zinc 1.5, phosphorus 0.10-0.12%, remainder copper. bronze coatings with a fine-grained structure have the best mechanical, corrosion-resistant and anti-friction properties; such a structure can be obtained with alloying elements such as nickel, vanadium, or silver, or by the combined addition of calcium, sulphur, and silicon. With pure binary alloys the production of a fine-grained structure is difficult since it requires a very high cooling rate after casting. An effective means of producing a uniform structure is by strongly superheating the bronze to a temperature of about 1225°-1250°

STRUCTURAL LITERATURE CLASSIFICATION

CA

Ya. Gol'dshtein and E. K. Klemptner. *Org. Chem. Ind.* (U. S. S. R.) 6, 179(1939).—Excellent results are reported with the use of the Sanderson drying time meter. C B

ASM-SLA METALLURGICAL LITERATURE CLASSIFICATION

PHASE I TREASURE ISLAND BIBLIOGRAPHICAL REPORT AID 357 - I

BOOK Call No.: TN672.V8

Author: GOL'DSHTEYN, YA. YE.

Full Title: THEORETICAL AND PRACTICAL PROBLEMS IN HIGH-FREQUENCY CURRENT TEMPERING OF CAST IRON

Transliterated Title: Voprosy teorii i praktiki v vysokochastotnoy zakalke chuguna

Publishing Data

Originating Agency: All-Union Scientific Engineering and Technical Society of Machine Builders. Urals Branch

Publishing House: State Scientific and Technical Publishing House of Machine Building Literature ("Mashgiz")

Date: 1950 No. pp.: 30 No. of copies: 3,000

Text Data

This is an article from the book: VSESOYUZNOYE NAUCHNOYE INZHENERNO-TEKHNICHESKOYE OBSHCHESTVO MASHINOSTROITELEY. URAL'SKOYE OTDELENIYE, THERMAL TREATMENT OF METALS - Symposium of Conference (Termicheskaya obrabotka metallov, materialy konferentsii) (p.273-302), see AID 223-II

Coverage: The hardening of working surface of cast iron by nitration with high frequency current and tempering at very low temperatures (below freezing) are discussed. Work of other investigators is reviewed and analysed together with the author's own experimental results. The allowable velocity

1/2

Voprosy teorii i praktiki v vysokochastotnoy zakalke chuguna AID 357 - I

of heating and phase transformation in cast iron at super-fast heating are specificed in relation to the velocity of carbon disintegration in austenite. The rates of heating used in the experiment vary from 10° to 5,000°C per second.

The author's experiments and discussion are mainly related to the study of effects of various factors on hardness of cast-iron surface, depth of penetration, mechanical properties and wearing ability. Attention is also given to the effects of high frequency current and alloying elements on hardening resistance to breaking and wear. 23 charts, 3 microphotographs, 7 tables.

Purpose: For scientific workers
Facilities: None
No. of Russian and Slavic References: 24 Russian (1931-50)
Available: Library of Congress.

2/2

PROCESSES AND PROPERTIES INDEX

E

810-E. Cast Crankshafts. (In Russian.) Ya. E. Gol'dshtein. *Vestnik Mashinostroeniya* (Bulletin of the Machine Construction Industry), v. 30, Feb. 1950, p. 10-15.

Production of low-alloy cast iron crankshafts having high mechanical properties. Stabilization of the structure and reduction of cast and structural stresses may be improved by high-temperature annealing for 2 hr after mechanical working at 620° C. High mechanical properties of cast iron may be obtained either by reducing the total C and Si or by alloying with Mn (1.5 or 1.75%) and Ni (0.60 or 0.90%).
(E25, J23, Q general, CI)

ASM-SLA METALLURGICAL LITERATURE CLASSIFICATION

GOLDSHTEYN, YA. YE

Cast Iron

Some properties of super-durable cast iron. Vest. mash. 31 No. 10, 1951.

9. Monthly List of Russian Accessions, Library of Congress, [illegible] 1953. Unclassified.

GOL'DSHTEYN, Ya. Ye.

"Surface Tempering Pig Iron instead of its Chilling in the Mold," Vest. mash., 31, No.12, 1951

GOL'DSHTEYN, Ya. Ye., DEMYANOVICH, A. N.

"Problems Concerning the Durability of Large-Sized Gears Tempered with High-Frequency Current," Vest. mash., 32, No.1, 1952

GOLDSHTEYN, Ya. E.

MOSCOW

"Methods of increasing resistance to wear in cast iron products. Moskva, Gos. nauchno-tekhn. izd-vo mashinostroit. i sudo-stroit. lit-ry, 1954. 27 p. (Obmen tekhnicheskim opytom) (55-32295)

TA475.M65

USSR/Engineering - Metal hardening

Card 1/1 Publ 128 - 12/26

Authors : Gol'dshteyn, Ya. E.

Title : The effect of hardening with high-frequency current heating on the strength of crude iron components

Periodical : Vest. mash. 2, 55-62, Feb 1954

Abstract : The casehardening of crude iron components with high-frequency current heating is described, and technical data is given on methods of heating, mechanical properties and the chemical composition of crude iron. Ten USSR references (1941-1952). Graphs; illustrations; tables; diagrams; drawings.

Institution : .....

Submitted : .....

Evaluation B-80261, 15 Nov 54

PHASE I BOOK EXPLOITATION SOV/1703

-3(3)

Gol'dshteyn, Ya.Ye., Candidate of Technical Sciences, L.S. Lyakhovich, Candidate of Technical Sciences, L.L. Pyatakova, Engineer, and G.M. Trusenev, Engineer

Mikrolegirovaniye stali 45 dobavkoy bora (Boron Additives for Microalloying of 45 Steel) Moscow, AN SSSR, 1956. 13 p. (Series: Informatsiya o nauchno-issledovatel'skikh rabotakh. Tema 1, no.I-56-217) 870 copies printed.

Sponsoring Agencies: USSR. Gosudarstvennyy komitet po novoy tekhnike, and Akademiya nauk SSSR. Institut nauchnoy i tekhnicheskoy informatsii. Filial.

Exec. Ed.: A.I. Okuneva, Engineer; Ed.: L.M. Gopman, Engineer; Tech. Ed.: V.A Ponomarev.

PURPOSE: This book is intended for scientists and engineers working in the field of metallurgy.

Card 1/2

Boron Additives for Microalloying (Cont.) SOV/1703

COVERAGE: The booklet gives the results of an investigation of the properties of boron-containing 45R steel developed by the Central Laboratory of the Chelyabinsk Tractor Plant in cooperation with the Department of Metallurgy of the Chelyabinsk Polytechnical Institute. At present, this steel finds wide application in the manufacture of critical parts of S-80 tractors. Active participation in the investigations was taken by TsNIIChERMET (Central Scientific Research Institute of Ferrous Metallurgy), and this organization was responsible for introducing 45R steel to industry. There are 5 references, of which 3 are Soviet and 2 English.

TABLE OF CONTENTS: None given. This book is divided into the five following sections:

AVAILABLE: Library of Congress

GO/ad
6-18-59

Card 2/2

GOL'DSHTEYN, Ya. Y.

GOL'DSHTEYN, Yakov Yefimovich; GORBUL'SKIY, Il'ya Yakovlevich; PYATAKOVA, Lyudmila Leonidovna; KUDRYAVTSEV, I.V., doktor tekhn.nauk.retsenzent; BEZUKLADNIKOV, M.A., inzh., red.; DUGINA, N.A., tekhn.red.

[Increasing the wear of tractor parts] Povyshenie dolgovechnosti traktornykh detalei. Moskva, Gos.nauchno-tekhn.izd-vo mashinostroit.lit-ry, 1956. 225 p. (MIRA 11:1)
(Tractors--Maintenance and repair)

GOL'DSHTEYN, Ya. Ye.

Boron-containing cast carbon steels. Ya. E. Gol'dshtein, L. I. Ryabtsova, and O. D. Zilinskaya. Vestnik Mashinostroenia 36, No. 7, 23-7(1956). — Addn. of 0.010-0.12% B to a C 0.31-0.39%, Si 0.40-0.50, Mn 0.58-0.85, Cr 0.09-0.25, Ni 0.13-0.21 did not improve the low ductility properties of this steel in the as-cast or heat-treated state.

J. D. Gal

PHASE I BOOK EXPLOITATION 882

Nauchno-tekhnicheskoye obshchestvo mashinostroitel'noy promyshlennosti. Sverdlovskoye otdeleniye

Povysheniye kachestva i ekonomichnosti mashin (Increasing the Quality and Efficiency of Machinery) Moscow, Mashgiz, 1957. 626 p. 5,000 copies printed.

Additional Sponsoring Agency: Ural'skiy dom tekhniki.

Eds.: Pal'mov, Ye. V., Doctor of Technical Sciences, Sokolovskiy, V. I., Candidate of Technical Sciences; Reviewers: Bogachev, I. N., Doctor of Technical Sciences, Gorshkov, A. A., Doctor of Technical Sciences, Zhukov, P. A., Candidate of Economic Sciences; Tech. Ed.: Sarafannikova, G. A.; Managing Ed. (Ural-Siberian Division of Mashgiz): Sustavov, M. I., Engineer.

PURPOSE: The book is intended for engineering and technical personnel.

COVERAGE: The book generalizes and synthesizes experience accumulated by the Ural plants and to some extent that of the Siberian plants in improving the technical and economic features of manufactured machines and in improving their quality. Data are also presented on attempts to lower the cost and to increase the quality of machines during the designing and production stages. The author

Card 1/15

Increasing the Quality (Cont.)

describes the shortening of the production cycle, reducing weight and dimensions along with improvement of operational qualities, increase in durability, and finally improvements in the external appearance of machines. There are 98 references of which 95 are Soviet, 2 German, and 1 English.

TABLE OF CONTENTS:

Card 2/15

Increasing the Quality (Cont.)

Increasing the Quality (Cont.)

Card 4/15

Increasing the Quality (Cont.)

Card 5/15

Card 7/15

Increasing the Quality (Cont.)

Card 9/15

Increasing the Quality (Cont.)

Card 11/15

Increasing the Quality (Cont.)

Design of packings

8. Structural Improvements in Reduction Gears (Anfimov, M. I., Engineer)
   - Bevel reduction gears
   - Combination reduction gears
   - Pinion gears
   - Planetary reduction gears
   - Gear boxes
   - Globular reduction gears

Ch. V. Technological Improvements in Machinery Manufacturing

1. Effective Methods for Surface Hardening of Machine Parts (Spiridonov, A. A., Candidate of Technical Sciences)
   - Rolling
   - Centrifugal ball working of surfaces
   - Electrospark hardening
   - Combination method of hardening
2. Present Technology of Finishing Operations (Poluyanov, V. T., Engineer)
   - Improvement of basic grinding indices
   - Precision grinding

Card 12/15

Increasing the Quality (Cont.)

Card 13/15

Increasing the Quality (Cnnt.)

Card 14/15

Increasing the Quality (Cont.)

AVAILABLE: Library of Congress

JG/flc
12-15-58

Card 15/15

SOV/137-58-8-17844

Translation from: Referativnyy zhurnal Metallurgiya, 1958, Nr 8, p 24 (USSR)

AUTHOR: Goldshteyn, Ya. Ye.

TITLE: New Types of Steel in the Tractor Industry (Novye marki staley v traktorostroyenii)

PERIODICAL: Mashinostroitel', 1957, Nr 12, pp [illegible]

ABSTRACT: In order to improve the quality of machine parts made of carbon steels and steel castings, as well as to provide substitutes for scarce alloyed steels, medium carbon steels containing 0.001-0.0025% B are being employed. Steels containing B exhibit improved deep hardenability characteristics and are readily manufactured. Both medium carbon and low carbon steels containing approximately 1% of Mn are employed for carburization. Chemical composition and mechanical properties of a number of steels containing B and Mn are given (15KBR, 18KhGT, 30KhGNT, etc.).

1. Steel--Production 2. Steel--Composition 3. Steel--Mechanical properties

M. Ch.

Card 1/1

AUTHOR: Gol'dshteyn, Ya.E., Lyakhovich, L.S., Candidates of Technical Sciences. 133-5-17/27

TITLE: Properties of steel 45 containing boron. (Svoystva stali 45 s borom)

PERIODICAL: "Stal'" (Steel), 1957, No.5, pp. 449-452 (U.S.S.R.)

ABSTRACT: The properties of steel 45P (developed by TsNIChTM and Chelyabinsk Polytechnical Institute (Chelyabinskiy Politekhnicheskiy Institut) and widely used in the tractor industry were compared with the properties of the same steel 45 without boron and steel 45Г2 which has an increased manganese content (1.4-1.8%). According to ГОСТ 1050-52 the composition of steel 45 is as follows %: C 0.42-0.50, Si 0.17-0.37, Mn 0.5-0.8, Cr ≤ 0.3, Ni ≤ 0.3, S ≤ 0.045, P ≤ 0.040. Steel 45P has the same composition with 0.002 - 0.006 of boron. Steel was made in 5 ton electric and 60 ton open hearth furnaces. Ferro-boron or ferro-boral was introduced into the liquid metal when 1/3 - 1/2 of the ladle was filled or placed on the bottom of the ladle. Preliminarily the metal was deoxidised with aluminium and titanium so that their contents were 0.04-0.06% Al and 0.03 - 0.04% Ti which ensured the presence of the effective boron in the metal, which entered the composition of α- or γ-solution or formed (when in excess) boron-containing

Card 1/2

Properties of steel 45 containing boron. (Cont.) 133-5-17/27

phase on grain boundaries (Fig. 1). The hardenability of the specimens from the above steels is shown in Fig. 2. The dependence of mechanical properties of steel specimens on the temperature of tempering in Figs. 3 and 4; the dependence of cyclic toughness on thermal treatment in Fig. 5; mechanical properties of specimens from crankshafts before hardening with high frequency currents in the table; the distribution of hardness along the depth of hardened layer - Fig. 6; and the micro-structure of the boundary zone between hardened and base metal in Fig. 7. It is concluded that steel 45 with boron can be recommended for the production of crankshafts and other responsible parts submitted to hardening with high frequency currents. There are 7 figures, 1 table and 2 Slavic references.

AVAILABLE:

Card 2/2

SOV/126-6-4-24/34

AUTHORS: Pyatakova, L. L. and Gol'dshteyn, Ya. Ye.

TITLE: Influence of the Character of the Interaction of Aluminium, Nitrogen, Boron and Titanium on Certain Properties of Steel (Vliyaniye kharaktera vzaimodeystviya alyuminiya, azota, bora i titana na nekotoryye svoystva stali)

PERIODICAL: Fizika Metallov i Metallovedeniye, 1958, Vol 6, Nr 4 pp 547-553 (USSR)

ABSTRACT: The aim of the work described in this paper was to establish in the first approximation the character of the interaction in steel of boron, nitrogen and aluminium and the influence of their interactions on the properties of medium alloy steel. The influence was investigated of the sequence of introduction into the liquid steel of nitrogen and boron on the character of their interactions and thus on certain properties of boron-containing steels. The range of useful application of titanium in such steels is outlined. For the experiments two basic and one reference group of castings were made; the metal was melted in a 5 kg electric furnace with an acidic bottom. Prior to tapping the metal was deoxidised with aluminium. Each variant of the castings was produced by the

Card 1/4

S/129-5-2-23/24

Influence of the Character of the Interaction of Aluminum, Nitrogen, Boron and Titanium on Certain Properties of Steel

Practical work. Enrichment of the steel with nitrogen was effected by introducing chemically pure sodium azide (in sealed iron capsules) into the liquid metal. [illegible] the first group of castings was prepared in such a way that the boron was added to the nitrogen-enriched steel, whilst the castings of the second group were produced from metal to which aluminum (NaCN) was added after the final deoxidation of the steel and after the boron has been introduced. The boron was introduced in the form of a 6% ferroboron. The boron, reference group, of castings was done in the same way as the second group. The chemical composition of the investigated steels and the sequence of introducing nitrogen and boron are entered in Table 1, p 348. In Figs. 1 and 2 the influence on the hardenability of the "Steel 30" of boron and nitrogen additions is graphed; in Fig. 5 the influence of nitriding on the hardenability of the boron-containing steel 45R is graphed. In Figs. 3 and 4 grain-structure photographs are reproduced. Fig. 6 shows [illegible] of the steel 45R after over-heating at 1275°C

Card 2/4

SOV/126-6-2-23/34

Influence of the Character of the Interaction of Aluminium, Nitrogen, Boron and Titanium on Certain Properties of Steel

and subsequent heat treatment. The impact strength values are entered in Table 2, p 349. On the basis of the obtained results the following conclusions are arrived at:

1. The combined influence of boron, aluminium and nitrogen on the properties of the steel depends to a considerable extent on the sequence of their introduction into the steel.

2. The established dependence of the influence of boron, aluminium and nitrogen on the sequence of their introduction into the steel is due to differing mechanisms of their interaction.

3. On introducing boron into liquid steel after deoxidation with aluminium, boron nitrides no longer form (or form in insignificant quantities), since the nitrogen which is dissolved in the steel is combined in soluble aluminium nitrides; this ensures that the boron is maintained in the solid solution and explains its influence on the properties of the steel.

Card 4/4 4. On introducing or absorbing nitrogen in boron-

SOV/126-6-2-23/34

Influence of the Character of the Interaction of Aluminum, Nitrogen, Boron and Titanium on Certain Properties of Steel

containing steel a partial or a total removal of the boron from the solid solution takes place due to the preferential formation of nitrides (carbonitrides). [illegible] lower temperature of over-heating of boron-containing steel in presence of titanium can be explained for [illegible] first stage of over-heating by the fact that the [illegible] carbides are holding the growth of the austenite grains, and for the range of high temperatures by the fact that it influences the boron distribution in the boundary zones.

There are [illegible] figures, [illegible] tables and 18 references, 9 of which are Soviet, [illegible] English, 1 German.

ASSOCIATION: [illegible] Institute (Chelyabinsk Tractor Works, Chelyabinsk Polytechnical Institute)

SUBMITTED: November [illegible], 1955

Card 4/4 1. Steel--Properties 2. Aluminum--Metallurgical effects 3. Boron--Metallurgical effects 4. Nitrogen--Metallurgical effects 5. Titanium--Metallurgical effects

SOV/137-59-[illegible]1265

Translation from: Referativnyy zhurnal. Metallurgiya, 1959, Nr 1, p 17 (USSR)

AUTHORS: Goldshteyn, Ya. Ye., Rossinskaya, T. A.

TITLE: Improving the Wear Resistance of Paddles of Shot-blasting Machines (Povysheniye iznosostoykosti lopatok drobemetnykh apparatov)

PERIODICAL: Tr. Uralskogo politekhn. in-ta, 1958, Nr 68, pp 105-116

ABSTRACT: Comparative wear-resistance tests were carried out on paddles of shot-blasting machines; the paddles were made of 50G steel (which had been subjected to various heat-treatment procedures: Normalization; quenching; quenching with a subsequent low anneal; electric-spark hardening or cementation with subsequent quenching); G13 steel (quenching, quenching with subsequent cold hardening; quenching in conjunction with cold hardening and tempering); graphitized steel; cast iron containing Te; cast iron with 5.5% Cr and 1.2% Ni as well as cast iron hardfaced with "Stellite" (Transl. Ed. Note: Presumably W carbide) and stalinite. It was established that maximum wear resistance is exhibited by an intensive-carbide structure. An austenitic structure is characterized by low wear resistance. Electric-spark hardening proved to be ineffective

Card 1/2

SOV/137-59-[illegible]-[illegible]265

Improving the Wear Resistance of Paddles of Shot-blasting Machines

Tempered Cr cast iron and a high-carbon steel which had been tempered to an R_C value of 60 are recommended

T F

Card 2/2

SOV/137-59-...199

Translation from: Referativnyy zhurnal. Metallurgiya 1959, Nr ... p 164 (USSR)

AUTHORS: Gol'dshteyn, Ya. Ye., Balakhovskaya, T. B.

TITLE: Means of Improving the Quality of Piston Rings (Puti povysheniya kachestva porshnevykh kolets)

PERIODICAL: Tr. Ural'skogo politekhn in-ta, 1958, Nr 68, pp 117-131

ABSTRACT: The investigations performed dealt with the following aspects of manufacture of piston rings (PR): The effect of the chemical composition of the cast iron on the microstructure of PR s; the effect of inoculants, inoculation procedures, and temperature schedules of smelting and pouring on the structure of the PR's: the effect of mold risers on the microstructure of cylinders. The mechanical and wear-resistance properties of PR's were examined, together with manufacturing processes of PR's made of high-strength cast iron. It was established that heat-resistance properties of PR s made of unalloyed high-strength cast iron (after a soaking period of 50 hrs at a temperature of 400° C) are identical to those of high-quality PR's cast individually from stock-type high-alloyed cast iron, despite the fact that the gap in the latter was somewhat

Card 1/2

SOV/137-59-[illegible]/199

Means of Improving the Quality of Piston Rings

smaller prior to the beginning of the tests. The possibility of reducing the initial dimension of the joint in PR's made of high-strength cast iron and, consequently the possibility of reducing their stressed state offers an additional means of increasing the heat-resistance properties of the PR under operating conditions. Alloying of the PR's enhances their [illegible] properties.

A. S.

Card 2/2

18(3); 18(5); 18(7) PHASE I BOOK EXPLOITATION SOV/3409

Gol'dshteyn, Yakov Yefimovich

Mikrolegirovanie stali i chuguna (Microalloying of Steel and Cast Iron), Moscow, Mashgiz, 1959. 197 p. Errata slip inserted. 4,500 copies printed.

Reviewer: P. V. Sklyuyev, Candidate of Technical Sciences; Ed.: B. P. Zakharov; Managing Ed. (Ural-Siberian Division, Mashgiz): A. V. Kaletina, Engineer; Tech. Ed.: N. A. Dugina.

PURPOSE: This book is intended for technical personnel of machine-building and metallurgical plants, design offices, and research and educational institutions.

COVERAGE: The author defines microalloying as the addition of individual elements or their compounds, in amounts not to exceed 0.1% of the final composition, to the molten alloy base metal for the purpose of improving mechanical and other properties of the material. This addition may sometimes be carried out simultaneously with deoxidation. The term microalloying (Russian "mikrolegirovaniye") was coined by S. M. Vinarov. The book deals with basic problems in the theory of the microalloying of steel and cast iron. The effect of small additions of

Card 1/6

AVAILABLE: Library of Congress

VK/fal
5-10-60

S/137/60/000/009/020/029
A052/A001

Translation from Referativnyy zhurnal, Metallurgiya, 1960, No. 9, p. 240, # 21601

AUTHORS: Gol'dshteyn, Ya.Ye., Zhichakina, O.D.

TITLE: The Effect of Cerium on the Structure and Properties of Forged Steel

PERIODICAL: V sb.: Redkozemel'ny, elementy v stal'yakh i splavakh, Moscow, Metallurgizdat, 1959, pp. 130-136

TEXT: The authors investigated the effect of Ce in the structure and properties of cast carbon steel of 0.30 (L[illegible]) [illegible] (1[illegible]) grade. Ce was introduced in the form of 94% Fe-Ce in amounts of 0.1-1.1% (according to various versions). It was found that Ce increased [illegible] and ductility of cast steel and also promotes effectively desulfurization of steel. Optimum amounts of Ce addition (in %) were for carbon steel 0.2-0.3 and for steel alloyed with Ni, Cr and Si 0.10-0.15. In [illegible]

Card 1/2

S/[illegible]/[illegible]/[illegible]/[illegible]
A[illegible]/A001

The Effect of Cerium on the Structure and Properties [illegible] and Forged Steel.

content of Ce / 0.1% in the steel, i.e. the [illegible] the [illegible] the
macro alloying of steel. There are 24 references.

[illegible]

Translator's note: This is the full translation of the original Russian abstract.

Card 2/2

SOV/[illegible]

AUTHOR: Gol'dshteyn, [illegible], Candidate of [illegible]

TITLE: Tellurium in Steel (Tellur v stali)

PERIODICAL: Stal', 1959, No 2, pp 156-159 (USSR)

ABSTRACT: The influence of small additions of tellurium on the structure and properties of structural steel was investigated. The experimental heats were carried out in a 50 kg induction furnace and in a [illegible] ton electric furnace (in both cases with acid lining). Various amounts of pure tellurium were introduced into small casting ladles into which the deoxidized steel was transferred from the tapping ladle. For the investigation [illegible] wedge-like specimens (cast in dry molds) and [illegible] kg ingots were used. An investigation of the microstructure and sulphur prints made from cast wedge specimens and longitudinal sections of the ingots did not show any noticeable influence of tellurium on the [illegible] of crystallization of steel in respect of the size of primary crystals or the appearance of dendritic structure. Forging of experimental heats containing from 0.01[illegible] to 0.[illegible]% of tellurium was normal without the formation of cracks or other defects providing the manganese content was not lower than 0.[illegible] with a

Card 1/4

[illegible]

Tellurium in Steel

Manganese content of 0.[illegible] all experimental heats containing tellurium exceed [illegible] the determination of [illegible] temperatures indicated that tellurium has [illegible] small influence on their position. Increasing [illegible] of a content of tellurium of 0.1% [illegible] The influence of tellurium on the mechanical properties of steel from one of the experimental heats of 0.[illegible] C, 0.[illegible] Mn, 0.7; [illegible] 0.095% P, 0.02% deoxidized with 0.1% of aluminum and containing 0.0[illegible], 0.2 and 1% of tellurium and 0.06 and 0.3% of tellurium and cerium respectively is shown in table 1 and figure 1. It was found that with tellurium content of 0.01% and more the yield point of steel decreases and when the tellurium content exceeds 0.1% plasticity and impact strength of steel deteriorates. A simultaneous introduction of cerium counteracts the negative influence of tellurium on the mechanical properties of steel and in the case of impact strength, even some improvement is obtained. The influence of tellurium on the grain size in heating was investigated in the temperature range 900-1600°C. It was found that [illegible] alloying with [illegible]

Card 2/4

SOV/133-59-4-19/[illegible]

Tellurium in Steel

decreases the size of secondary grains increasing their stability to growth on heating up to 1170°C inclusive (fig.3 and table 2) and sharply decreases the hardenability of steel (fig.4). The influence of tellurium on the distribution of carbon along the depth of the carburised layer is shown in fig.5. Microalloying with tellurium decreases the intensity of carburisation of steel during the cementation process which permits avoiding over-saturation of the surface layers with carbon and related to it, excessive brittleness. On the basis of the results obtained microalloying with tellurium is recommended for a wide range of structural steels in all cases when it is necessary: a) to obtain a fine grain structure already in rolled, forged or stamped products; b) to decrease the sensitivity of steel to overheating and c) to increase the hardenability of the whole parts or their working surfaces with simultaneous decrease of hardenability

Card 3/4

SOV/135-59-4-19/25

Tellurium in Steel

and tendency to the formation of hardening cracks. There are 5 figures and 2 tables

ASSOCIATION: Chelyabinskiy Traktornyy Zavod (Chelyabinsk Tractor Works)

Card 4/4